Development of Local Area Augmentation System Siting Criteria

Dave Lamb, *FAA William J. Hughes Technical Center, ACT-360*

BIOGRAPHY

Dave Lamb is a Senior Electronics Engineer in the Navigation Branch of the Communications, Navigation and Surveillance Engineering Division at the FAA William J. Hughes Technical Center. He has worked in the test and evaluation of radar, RF communications, and precision landing systems since 1987. He is currently the FAA lead for Local Area Augmentation System (LAAS) siting and is chairman of the LAAS Siting Working Group.

ABSTRACT

The FAA is in the process of defining siting criteria to support the fielding of the Category I LAAS Ground Facility (LGF). A siting working group has been established as the forum for development of the siting criteria and discussion of siting issues. A first draft of the LGF Siting Criteria Document has been completed and math modeling and T&E efforts are underway to define engineering siting criteria. The LGF Siting Criteria Document focuses on providing guidance to the siting engineer to select an LGF site that achieves the operational requirements at a given airport.

INTRODUCTION

The FAA is in the process of defining siting criteria to support the fielding of the Category (CAT) I LAAS Ground Facility (LGF). The end-product of this effort will be an FAA Order that provides criteria and guidance to the siting engineer for selecting the optimum LGF site.

The LGF has been specified with great consideration to the siting feasibility or "siteability" of the ground system. The LGF has a built-in siting flexibility that can be attributed to the nature of satellite navigation and to the FAA LAAS architecture as specified in the CAT I LGF Specification, FAA-E-2937[1]. This siting flexibility allows for the tailoring of LGF installations based on site-specific requirements.

SITING BENEFITS OF LAAS

Many of the cost-benefits of LAAS are directly related to the siting attributes of the LGF. This is reflected in the background section of the LAAS Requirements Document [2]; "The LAAS will satisfy the mission need by providing all-weather approach and landing as well as surface navigation capabilities with significant improvements in service flexibility, safety, and user operating costs. The LAAS will accomplish this through reduced siting constraints, multiple runway service, and reduced ground and avionics installation costs. High quality navigation services will be provided without investing in numerous expensive ground facilities, resulting in savings to the U.S. government."

The LGF has reduced siting constraints when compared to existing terrestrial NAVAIDs (e.g., Instrument Landing System (ILS)). The LGF is not fixed by function, i.e., is not required to be sited at a specific area on the airport, with respect to runway threshold for example. The installation of the LGF will not require the extensive grading and potential real estate acquisition associated with terrestrial NAVAIDs such as ILS. This LGF attribute combined with the reduced hardware requirements to support multiple runways results in installation cost reduction over terrestrial NAVAIDs.

The LGF is a distributed system in that there are no collocation requirements for the primary LGF subsystems. The LGF is also a modular system in that additional components can be added to the system to mitigate site-specific issues in difficult siting environments. These attributes allow for great siting flexibility and increases the number of potential sites for the LGF.

One of the most significant benefits of LAAS is that a single LGF can provide CAT I service to multiple runways. In addition, the LGF can be an enabling technology for surface navigation, support terminal area navigation, and provide positive guidance in the missed approach regions.

LAAS SITING WORKING GROUP

The LAAS Siting Working Group (SWG) was formed in April, 2000 with the primary objective of writing the LGF siting criteria document. A first draft was completed in October, 2000. The authoring group consisted of personnel from the LAAS Program Office (AND), FAA Airway Facilities(AOP), FAA Airports (AAS), The FAA William J. Hughes Technical Center (ACT), Ohio University, and support contractors. The group has since been augmented to include membership from FAA Spectrum (ASR), and FAA NAS Implementation (ANI).

Siting Criteria Document

The LGF Siting Criteria Document focuses on providing guidance to the siting engineer to select an LGF site that achieves the operational requirements at a given airport. Installation requirements and guidelines will be addressed in a separate FAA Handbook.

The content of the first draft of the LGF siting criteria document is based on existing FAA siting Orders [3, 4] and contains a description of the LGF equipment, LGF principles of operation, siting procedures, installation requirements pertinent to site selection, basic LGF siting concepts, and siting guidelines and criteria for both the ideal and non-ideal locations. One of the purposes of this effort was to identify the technical 'engineering' siting criteria that would need to be defined through math modeling and test and evaluation (T&E).

A math modeling and T&E test plan has been developed by the FAA and this phase of the siting criteria development is currently underway. The math modeling and T&E will be conducted by the FAA WJHTC and the Avionics Engineering Center at Ohio University. An overview of this effort is presented later in this paper.

LAAS FUNCTIONS IMPACTED BY SITING

Siting of the LGF impacts the ability of the LGF to receive satellite ranging signals, to compute a pseudorange measurement with acceptable error, to perform integrity functions, and to broadcast corrections.

Ranging Signal Receive and Decode

The reception and continuous tracking of Global Positioning System (GPS) and Space-Based Augmentation System (SBAS) ranging signals requires line-of-site (LOS) to the ranging source from the Reference Receiver Antennas (RRAs) with sufficient received power at the RRA. Obstructions in the airport environment can cause poor reception of ranging signals at lower elevation angles. The 'holes' in the reception mask of the LGF may cause a decrease in the system availability

The accurate computation of pseudorange measurements requires a minimization of unacceptable multipath from objects and terrain in the local airport environment.

Integrity

The real-time estimation of error at each RR, as specified in FAA-E-2937, requires comparison of measurements between multiple RRs. Correlated errors between RRs can cause a degradation of the error estimates and compromise the integrity of the LAAS.

A key integrity term, $\sigma_{pr\text{-}gnd}$, is defined as the standard deviation of a normal distribution associated with the signal-in-space contribution of the pseudorange error due to conditions on the ground. The establishment of $\sigma_{pr\text{-}gnd}$ that meets the site performance requirements requires a low multipath, low interference environment. Objects, terrain, and interference in the local environment can cause $\sigma_{pr\text{-}gnd}$ to exceed the requirements curve.

Broadcast Corrections

The broadcast of corrections to the users requires the system meet the minimum field strength requirements within the coverage volume with an acceptable message error rate. Obstructions in the airport environment can cause insufficient field strength in portions of the coverage volume.

Ensuring LAAS Functionality

Siting criteria will be developed to establish RRA object clearance zones that should be free from objects (both stationary and transient), place limits on relative terrain features, RRA phase center height recommendations, and interference environment evaluation techniques to minimize pseudorange measurement errors and therefore minimize $\sigma_{pr\text{-}gnd}$. Siting criteria will also be developed to establish RRA separation minima to minimize correlated errors between RRAs.

Siting criteria will be developed to establish VHF Data Broadcast (VDB) Antenna object clearance zones that should be free from objects (both stationary and transient), limits on relative terrain features, and VDB phase center height recommendations to maximize VDB coverage.

WHAT ARE WE SITING?

One of the issues confronting the SWG is that the LGF equipment will not be known until the FAA federal acquisition is underway. Since the LGF specification is at the system level vice the equipment level, the contractor has flexibility in implementing system requirements.

This is not to suggest that the FAA is unaware of available system components that will meet the specification requirements. The FAA has fostered the development of specific technologies and has been conducting research and T&E on equipment and algorithms since the early 1990's. The FAA will base development of siting criteria on proven system components and will revise the criteria as necessary to incorporate contractor-specific equipment.

It is not within the scope of this paper to address specific equipment types in detail. However, it is useful to understand the LGF equipment groups and configurations to better understand the scope of the siting engineer's task and siting mitigation options that are built into the system architecture.

Equipment Groups

The LGF is composed of five equipment groups:

- Reference Receiver Group
- Processor Group
- VHF Data Broadcast Group
- Operations and Maintenance Group
- Ancillary Group

The Reference Receiver Group includes typically three or four Reference Receivers (RRs) and Reference Receiver Antennas (RRAs), and associated interconnections.

The VHF Data Broadcast Group includes the VDB transmitter(s), VDB antennas, and associated interconnections.

The Processor Group includes the LGF computers, and associated interfaces and interconnections.

The Operations and Maintenance Group includes the Local and Remote Status Panels, Maintenance Data Terminal, and Air Traffic Control Unit.

The Ancillary Group includes primary power, backup power, and required structures including equipment shelters and antenna mounts.

The Reference Receiver Group and the VHF Data Broadcast Group are the primary equipment groups and are the main focus of the siting criteria development effort. Siting criteria will be developed for these two groups and the primary equipment shelter.

The LGF Equipment Block Diagram is shown in Figure 1. This figure is not intended to define the configuration or placement of LGF equipment.

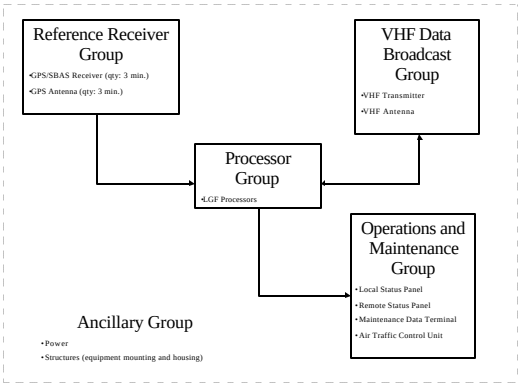

Figure 1. LGF Equipment Block Diagram

Equipment Configurations

The optimal LGF configuration is one that allows for siting flexibility through the distribution of the primary equipment groups. Figure 2 shows two LGF configurations that allow for the siting and installation of a distributed system.

Both configurations collocate the RR and RRA, which permits the RRAs to be sited further away from the primary equipment shelter and from each other. This is because RF signal loss and the associated stringent cable length restrictions are not a factor. Since the RR is envisioned to be a Line Replaceable Unit (LRU), the

location of the RR in an enclosure located outdoors in close proximity to the RRA mount is acceptable for maintenance.

The difference between the two configurations is whether the VDB and VDB Antenna are collocated. Again the RF cable losses are a factor that makes the second configuration optimal with respect to the distribution of the LGF primary equipment groups. However, the VDB transmitter(s) and associated backup battery power, will require an equipment shelter. From a maintainability, siting, and cost effectiveness perspective, the collocation of the VDB transmitter and VDB antenna may not be optimum in the standard installation case. However, this configuration may be desired when addressing challenging siting issues at operational airports.

In terms of balancing the distribution of primary equipment groups with the maintainability of the LGF, the first configuration is optimal. In this configuration the RR and the VDB groups can be separated and the VDB RF loss can be minimized by locating the VDB antenna in close proximity to the primary equipment shelter. The best solution may be to have a standard configuration based on the first with the capability to implement the second at difficult sites.

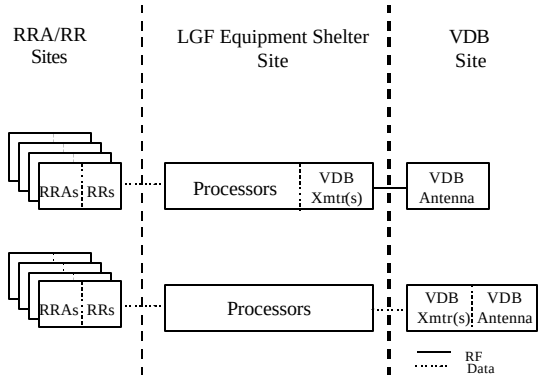

Figure 2. LGF Equipment Configurations

TYPICAL NAVAID SITING CONSIDERATIONS

There are a set of siting considerations that must be addressed when siting a NAVAID on airport property. These include consideration of runway-associated safety elements, system object clearance areas, the footprint of the system, critical area impact on airport operations, interference to/from other systems, and installation considerations.

Runway-Associated Safety Elements

The siting of any NAVAID must consider the potential for penetration of imaginary safety/obstruction surfaces as defined in AC 150/5300-13, “Airport Design” [5] and FAR Part 77 Subpart C, “Obstruction Standards”[6].

These surfaces are established for each airport and the size of each imaginary surface is based on the category of each runway according to the type of approach available or planned for that runway.

The FAR allows for penetrations of airport obstruction surfaces for systems that are fixed by their functional purpose. Since the LGF is not fixed-by-function, any penetrations of these surfaces will require a NAS Change Proposal (NCP). It is important to note that these imaginary surfaces are evaluation surfaces and not object exclusion surfaces. This means that the LGF components can penetrate these surfaces but must receive airspace review and approval.

LGF Object Clearance Area

The LGF Object Clearance Area (LOCA) is a zone encompassing a specific ground area in the vicinity of the LGF antennas (RRA and VDB antenna) that should be kept clear of permanent scatterers to ensure LGF accuracy, integrity, and continuity. If the antenna is sited such that an object(s) is within the LOCA, the siting engineer will have to show that there is no significant impact on system performance due to the object. An illustrative example of an RRA LOCA is shown in Figure 3.

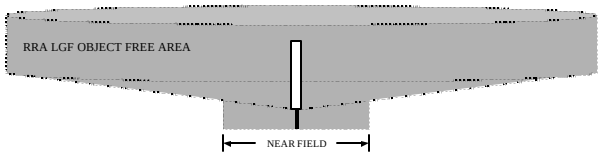

Figure 3. Example RRA LOCA

LGF Footprint

The footprint of the system will be the basis for map studies that will be used for initial site selection. The LGF footprint includes not only the physical dimensions of the equipment, but the application of the developed engineering siting criteria (e.g., antenna LOCAs and antenna separation criteria).

Since the LGF is a distributed system, the LGF footprint does not have fixed dimensions but consists of subsystem footprints that can be sited throughout the airport

Critical Areas

The critical area is a zone encompassing a specific area in the vicinity of the LGF antennas that must be protected from the unlimited movement of surface and air traffic to ensure LGF accuracy, integrity, and continuity

The worst-case effects from transient scatterers in the critical area will be when the scatterer is stationary. Therefore, critical areas at a specific airport will be established using the intersection of the LOCA and the airport surface movement and any aircraft approach areas. Since the LGF location is not fixed by function, the impact of an LGF site on airport operations will be unique to the particular airport. Also, since a single LGF may provide service to multiple runways, controlled movement in critical areas could restrict CAT I procedures at multiple runways. An illustrative example of an RRA critical area is shown in Figure 4.

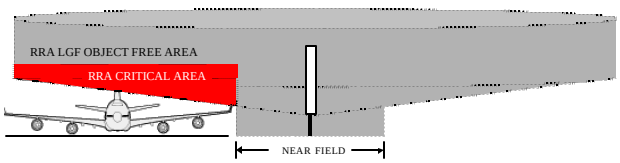

Figure 4. Example RRA Critical Area

It should be noted that an increase in the antenna height in this example could greatly decrease or eliminate the critical area. The ability of the antennas to perform within specification at greater heights will be useful for siting trade-offs.

Interference

The as-installed interference environment must be considered when siting and LGF. Radio Frequency Interference (RFI) to the RR may cause a degradation of signal quality resulting in a loss-of-lock of the satellite signal and hence has an impact on continuity and availability. FAA-E-2937 specifies the nominal operating GPS interference environment for the LGF.

The siting engineer will ensure that the local interference environment meets the requirements in FAA-E-2937. RFI characterization and localization should be performed prior to site selection if interference levels above the interference mask are detected.

The VDB equipment can be a source of RF interference to other systems. The siting engineer should consider the electromagnetic impact of the siting of the VDB antenna on other systems when considering a potential site. Separation distance to commercial communications devices will be specified in the siting criteria document.

Installation Considerations

Installation Considerations must be addressed when performing trade-off analyses between prospective LGF sites. These considerations include proximity of power, trenching requirements, site access, and environmental impact. Although installation considerations should not be a disqualifier in most cases, they will weigh heavily when making the siting decision between comparable sites.

LAAS UNIQUE SITING CONSIDERATIONS

Multiple Operational Requirements

Although LAAS was conceived as primarily a precision approach and landing system, it can also support other functions. These include providing positive guidance in the missed approach region, supporting differential positioning service, and supplementing surface navigation.

The siting engineer must consider the intended operational use of the LAAS at the subject airport during preliminary site selection.

Multiple Runway Coverage

The ability of a single LGF to provide CAT I approach capability to multiple runways is the primary driver for the siting of the VDB antenna. The VDB equipment is specified to meet the minimum field strength requirements out to a distance of 23 nmi from the antenna. The desired CAT I approach begins at 20 nmi from runway threshold. This gives the siting engineer 3 nmi of slop from each runway threshold that is planned to have a CAT I capability.

To illustrate this concept, consider the following example airport siting study shown in Figure 5. The subject airport is George Bush Intercontinental Airport (IAH) in Houston, TX. Three nautical mile circles are drawn about each runway threshold. The intersection of these circles, drawn in red, represents the siteable area for the VDB. For IAH, the siteable area is 9 nmi.

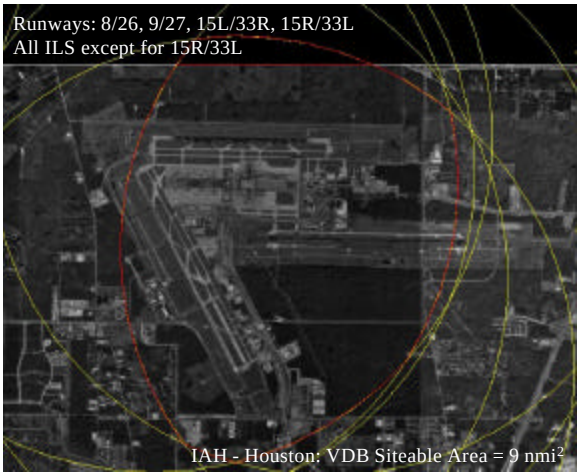

Figure 5. Example VDB Siting Study

It is interesting to note that the intersection of the 3 nmi circles lies in the approximate geometric center of the airport. This is significant since this is typically where there is a high density of airport facilities.

Not Fixed-by-Function

Unlike ILS, the LAAS is not fixed by function, i.e., the LAAS does not have a requirement to be installed at a specific location on the airport (with respect to runway centerline for example). This greatly increases the number of potential sites for the LAAS and therefore potentially decreases installation cost. It is also anticipated that the extensive site preparation activities associated with ILS (e.g. grading, real estate acquisition) will be greatly minimized for the LAAS.

Distributed System

The LAAS can be installed as a distributed system. This further increases the number of potential sites since the LAAS components are not required to be collocated.

Although the distributed system concept gives the siting engineer great flexibility in choosing a prospective site, caution must be exercised when selecting antenna locations on the airport. The distribution of LGF antennas is also a distribution of multiple LOCAs and therefore multiple potential critical areas. The siting engineer must weigh the benefits of distributing system components against the potential impact to surface operations.

Modularity

Additional RR/RRAs and VDBs can be integrated into the LGF to mitigate siting issues in difficult siting environment. For example, an additional VDB may be required to provide CAT I coverage to all runways in geographically dispersed airports. Also, an additional RR/RRA may be required to meet site availability requirements.

Satellite Signal Reception

The LAAS is required to provide corrections for all satellites in view within an elevation from 5 to 90 degrees. This near-360 degree in azimuth volume must be clear of obstructions that cause blockage of the satellite signal. The required reception mask for rising satellites is actually between 3 and 4 degrees when considering the initialization time of smoothing filters and integrity checks performed upon initial tracking of the satellites.

Any obstructions within this region will cause a degradation of system availability. It may be acceptable to mask out obstructions as long as the availability requirements at the airport are achieved. This capability would require each airport to specify its reception mask in order to facilitate accurate predictive availability computations. Predictive availability refers to the estimation of LGF availability at a specific airport at a designated arrival time performed by the flight crew at dispatch.

Real-Time Pseudorange Correction Error Estimation

The LGF pseudorange correction error estimate or B-value for satellite n and reference receiver m on a M reference LGF is given by:

$$B_{n,m} = \frac{PRC_{n,m} - \frac{1}{M}\sum_{j=1}^{M} PRC_{n,j}}{M-1}$$

The B-values are essentially a consistency check between the PRCs of multiple reference stations. For the B-value to be an accurate estimate of the pseudorange correction error, the errors must be uncorrelated between RRs.

Due to the sinusoidal nature of smoothed, noise-like effects present in the pseudorange correction error, it is not possible to have purely uncorrelated pseudorange correction error. This ‘chance’ correlation is not related directly to the chosen site and cannot be mitigated through siting techniques. Deterministic correlation, i.e., correlated multipath errors caused by a common scatterer can be minimized through proper siting. This includes establishing an RRA minimum separation distance and by removing potential common scatterers.

The amplitude of the correlated noise-like errors must be considered when evaluating the accuracy of the real-time pseudorange correction error estimate. Errors below the

established error amplitude threshold should not be included in the correlation analysis.

OPERATIONAL CONSIDERATIONS

The operational requirements at the candidate airport will drive the siting decision of the LGF equipment. In some cases, there will be mandatory and 'nice-to-have' operational requirements. The siting engineer's goal will be to achieve the mandatory requirements while getting as many of the nice-to-have's as feasible. The following list of questions illustrates the operational considerations that may be addressed at a typical airport.

At the subject airport, is the LGF required to support:

- coverage to all runway ends?
- coverage to 20 nmi on all qualified runway ends?
- positive guidance in all/any missed approach regions?
- surface navigation?
- advanced procedures?
- upgrade to CAT II/III?

SITING PROCEDURES

The siting engineer will follow a structured approach to choosing the optimal site for the LGF equipment. This approach begins with map and paper studies to aid in selecting initial sites. This is followed by a preliminary site inspection to narrow the field of prospective sites through primarily qualitative assessments. The final activity is the site survey which provides quantitative data to aid the final site decision.

Map/Paper Studies

The initial phase of the project engineering is to gather information necessary to make informed decisions regarding initial site selection.

The documentation and required information includes:

1. Airport Layout Plan.
2. Airport Master Plan
3. Airport Clearance Charts (Department of Commerce publication)
4. Topographic Charts (U.S. Geological Survey publication) for the airport and full service coverage area for the LAAS.
5. The locations of environmentally-sensitive areas within the Airport Operations Area.
6. Obstacle free zones (OFZ), runway safety areas (RSA), and object free areas (OFA).
7. Description of existing Air Traffic Control (ATC) facilities, NAVAID lighting and power sources.
8. Airport conduit and cable information.
9. Ground traffic patterns.
10. Run-up and jet blast areas.
11. Determination of the Landing Threshold Point (LTP) and minimum glidepath.
12. LGF equipment configuration options and configuration-unique characteristics pertinent to siting.
13. Airport property lines.
14. U.S. IAPs defining existing and proposed approach procedures to the airport and identifying obstacles in the terminal area.
15. Noise abatement regions, procedures, and plans.
16. Restricted airspace.
17. Existing and future traffic patterns.
18. Any required alteration to proposed flight paths.
19. Aerial photographs of the airport and surrounding areas (if available).

An example of the importance of compiling the required information prior to initial site selection is shown in Figure 6. This picture shows the planned construction for the next 5 years at IAH. This information was taken from the airport's master plan.

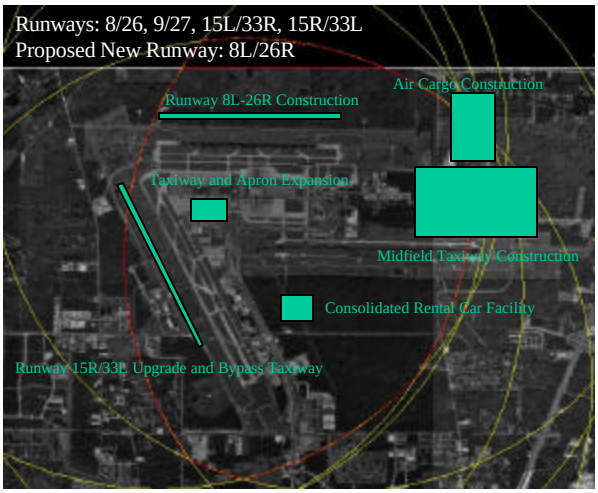

Figure 6. Planned Construction at IAH

The picture shows the planned construction for an additional runway (8L/26R), a widening and lengthening of an existing runway (15R/33L), and several other construction projects. This information could greatly alter the siting decision for the VDB antenna at IAH discussed previously. The importance of proper planning cannot be overemphasized since it is almost a certainty that the composition of any U.S. airport 5-10 years from now will be different from the composition today.

Preliminary Site Inspection

The purpose of the preliminary site inspection is to define the siting environment more specifically in order to refine the list of prospective sites. This inspection includes site visits to the airport to verify the results of the map/paper studies and to perform a qualitative assessment of airport properties. The data collected will include required service, terrain features, potential sources of multipath and shadowing, land availability, proximity of power, environmental impact, and site access.

Site Survey

The site survey will be conducted to provide quantitative data on the candidate sites chosen during the preliminary site selection process. The site survey will include measurement of precise horizon profiles, GPS data collection, VDB data collection, and interference data collection. It is important to note that the site survey methodology and test results will not be used to establish site parameters. The establishment of site parameters will be accomplished as part of the installation/establishment procedures for the LGF.

Precise Horizon Profile

A precise horizon profile will be generated using a transit, theodolite, or other precise survey equipment. The LGF GPS reception mask will be based on this horizon profile. The horizon profile will be inflated, where applicable, to account for a five-year nominal tree growth of six inches per year. The distance to trees recorded during the site survey will be used to determine the inflated elevation angles. The LGF GPS reception mask will be an input to the LGF Availability Model.

Math Modeling

Math modeling will be used to evaluate prospective RRA and VDB antenna sites. Data gathered during the preliminary data acquisition and preliminary site selection will be used as inputs to the models. The data will include antenna height above ground and terrain features and obstacles.

GPS Data Collection

The use of data collection at each prospective site will be necessary until a validated and mature LGF GPS and VDB math models exist. It is anticipated that initial LGF installations will require both math modeling and data collection.

The site survey will involve the installation of a GPS data collection system at each of the prospective antenna sites. The data collection system will consist of an RR, RRA, equipment to measure ionospheric delay, and a data logging computer(s). The RRA will be installed on a temporary platform at the proposed antenna height. A minimum of 72 hours of raw GPS observables (including pseudorange, carrier phase, carrier-to-noise ratio, satellite ephemeris) will be collected at each site. The L1/L2 data collection unit will consist of an L1/L2 receiver and antenna installed within a reasonable proximity to the proposed RRA site.

An analysis of the multipath at each antenna site will be performed using government-approved code-minus-carrier (CMC) techniques. The detail of these techniques is beyond the scope of this paper. The reader may want to consult [7] and [8] for a basic description of CMC analysis and application of CMC for error source identification, respectively. The analysis will include the generation of error statistics that will be compared to the requirements curves. Analysis will also be conducted to identify sources of excessive multipath.

VDB Data Collection

VDB data collection will consist of the precise horizon profile described above and in some cases may require a site survey flight test using a LGF VDB installed on a temporary antenna tower. The testing will include measurement of field strength throughout the coverage volume and message error rate analysis. The site survey flight test may be necessary for the initial LGF installations and in difficult siting environments to assess the coverage volume impact of obstructions and terrain. Testing will also be conducted to assess the potential interference to other NAVAIDs and commercial communications equipment installed at the airport.

Interference Data Collection

The interference environment at the prospective RRA sites will be characterized. If the interference environment does not meet the interference mask specified in FAA-E-2937, the interference source should be located and removed if possible. If the interference signal is in conformance with its licensed operating signal parameters, and removal of the interference source is not an option, the RRA will need to be relocated or additional filtering added.

Availability Analysis

An availability model will need to be developed to assess the achieved availability at each prospective site. This availability model should consider:

1. Location of the RRAs
2. Constellation (# of SVs and SV geometry)
3. Number of RRs
4. Accuracy of RR Measurements
5. Accuracy of Airborne Receiver Measurements
6. Ground GPS reception mask
7. Airborne GPS reception mask
8. Approach GPS reception mask

9. Equipment MTBF
10. Equipment MTTR

The GPS reception mask will be based on the precise horizon profile and the GPS data collection. The RRA performance curve will be based on the GPS/LGF model results and/or GPS data collected during the site survey.

DEVELOPMENT OF ENGINEERING SITING CRITERIA

Approach

Engineering siting criteria will be developed through theory, math modeling, and T&E. A phased approach is being employed to minimize risk and to meet program milestones while addressing the reality of not having mature, validated math models.

The first phase will consist of incremental validation of the math models through T&E. Each of the siting studies described later in this paper will be performed using the unvalidated math models. T&E will be performed concurrently, in similar test environments, to validate the results of each of the studies. The T&E results will be used as a feedback mechanism for the refinement of the math models. It is anticipated that the first phase development will produce conservative siting criteria to be used to support siting of the initial LGF production units.

The second phase will consist of running detailed simulations using the validated math models to refine the engineering siting criteria developed during the first phase. It is anticipated that the second phase development will produce less conservative siting criteria that will be used to support siting of the LGF production units.

Math Models

The LGF math models consist of propagation models and an LGF GPS receiver model. The propagation math models for GPS and VDB are based on an existing robust ILS propagation math model. An advanced LGF GPS Receiver Model has been developed which includes precise modeling of tracking loops. The models are based on equipment known to meet pertinent LGF specification requirements. The models will be refined to reflect LGF contractor's equipment as information becomes available. The math models were developed at the Avionics Engineering Center at Ohio University and will be refined through the initial T&E validation effort.

Test and Evaluation

T&E facilities at the WJHTC will be utilized for the bulk of the model validation efforts. LGF hardware, automated data collection equipment, and data analysis techniques are existing assets that were developed to support the operation of the FAA LAAS Test Prototype (LTP) and characterization of LTP errors.

Pass/Fail Criteria

The primary pass/fail criteria used in the development of RRA engineering siting criteria will be (1) E_{max} , which is defined as the amount of error allowed to be introduced on the pseudorange correction from a single RRA, (2) $E_{bias\text{-}max}$, which is defined as the amount of error bias allowed to be introduced on the pseudorange correction from a single RRA, and (3) σ_{th} , which is defined as the threshold for the allowable increase in the standard deviation of the pseudorange correction error from a single reference receiver for a single satellite.

The pass/fail criteria used in the development of VDB engineering siting criteria will be (1) minimum field strength requirements, (2) maximum field strength requirements, and (3) message error rate requirements.

Siting Studies

The following are the planned siting studies that will be used to define the LGF engineering siting criteria.

1. RRA Baseline Performance
2. RRA LGF Object Clearance Area
3. RRA Critical Area
4. RRA Horizon Clearance Area
5. RRA Optimum Height
6. RRA Separation Distance
7. VDB Baseline Performance
8. VDB Antenna LGF Object Clearance Area
9. VDB Antenna Critical Area
10. VDB Antenna Optimum Height
11. VDB Coverage Exclusion Regions
12. VDB Interference
13. LGF Siting Feasibility

RRA Baseline Performance. The objective of the RRA Baseline Performance Study is to assess the nominal performance of the RR/RRA under two simulation scenarios: (1) RRA installed on infinite ground plane, and (2) RRA installed at benign site (modeled terrain only). The simulations will be performed with a full constellation to establish the baseline sigma performance vs. elevation. The results of the simulations performed with the RRA installed at a benign site will be verified through T&E.

RRA LGF Object Clearance Area. The objective of the RRA LGF Object Clearance Area (LOCA) Study is to define and validate the LOCA.

Simulated test objects will be introduced at various distances from the test antenna. These objects will include equipment shelters, water towers, communications

towers, trees, hangars, hills, and parked aircraft. The LOCA boundaries will be defined where the simulation error results are equal to the most conservative pass/fail criteria. The results of the simulations will be verified with similar test objects introduced in the field test environment.

RRA Critical Area. The objective of the RRA Critical Area Study is to assess the impact that the RRA critical area has on airport operations at several airports. This study will provide a preliminary assessment on the siteability of the RRAs at various airports.

RRA Horizon Clearance Area. The objective of the Horizon Clearance Area Study is to investigate the susceptibility of the RRA to multipath from up-sloping terrain, buildings, and trees that are located at various distances from the RRA. This test may also evaluate the effectiveness of mitigation techniques including alternate receiver designs.

Simulations will be run with the RRA in the presence of a tilted ground plane. The angle of tilt will be varied to assess the distance limit of the clearance area. Alternate receiver designs may be simulated to assess the ability of hardware to mitigate this type of error. Field T&E will be conducted to verify the results. A baseline evaluation of the RRA will be achieved by conducting tests in a location where there are no scatterers above 1° in elevation relative to the RRA. T&E will then be conducted in conditions similar to the simulation scenarios.

RRA Optimum Height. The objective of the RRA Optimum Height Study is to define and verify the minimum, nominal, and maximum RRA mounting height. The RRA optimum height is the range of antenna heights to achieve optimal antenna performance with respect to local environment (e.g. vegetation, snow) and ground multipath. The RRA Optimum Height Study will consist of analysis, math modeling, and field test and evaluation.

The minimum RRA height with respect to local environmental conditions will be based on a review of minimum height requirements for other navigational aids (e.g. ILS, MLS). This minimum height will be based on allowable vegetation growth and snow accumulation. This minimum height assumes that the site is free from scatterers in the LOCA. This minimum height may not be the same as the minimum height as determined by the math model. The larger of the minimum heights will be used as the RRA minimum height.

The math model will be used to define the minimum and maximum height (if applicable). A nominal antenna height range will be determined based on the characteristics of the ground multipath incident at the RRA. Field T&E will be conducted to verify the simulation results.

RRA Separation Distance. The objective of the RRA Separation Distance Study is to determine the minimum RRA separation distance required to minimize correlated multipath between RRAs.

The Fraunhofer region of the RRA is given by $2d^2/\lambda$ where d is the aperture length of the antenna and λ is the wavelength. The Fraunhofer region will be computed for each antenna under test. The minimum separation distance will be based on non-overlapping Fraunhofer regions between antennas and is therefore given as: $d_{sep} = 4d^2/\lambda$. This value will be the starting point for the math model evaluation of the impact of separation distance on error correlation.

A number of simulations will be run to assess fault-free and deterministic correlation between reference receivers. T&E will be conducted under similar scenarios to verify the model results. The minimum RRA separation distance will be defined where increase in antenna separation distance results in no significant decrease in correlation of errors between RRAs.

VDB Baseline Performance. The objective of the VDB Baseline Performance Study is to assess the nominal performance of the VDB under two simulation scenarios: (1) VDB installed on infinite ground plane, and (2) VDB installed at benign site (modeled terrain only). The study will investigate the trade-offs between VDB coverage and VDB antenna height and will be a subset of the VDB Antenna Optimum Height Study.

VDB Antenna LGF Object Clearance Area. The objective of the VBD Antenna LGF Object Clearance Area (LOCA) Study is to define and validate the LOCA.

The math model will be used to define the VDB Antenna LOCA boundaries. The amount of multipath/fading is dependent on the size, orientation and composition of the scatterer as well as the relative geometry between the satellite, scatterer, and VDB Antenna. The model scenarios will be designed to consider various scatterer types and relative geometries. The math model will use the minimum field strength requirement as the threshold value in the determination of the VDB Antenna LOCA.

T&E will be conducted to verify the model results. Test objects common to the airport environment will be used as the scatterers. The VDB Antenna(s) under test will be sited in an open field or on a rooftop at a precisely surveyed location. This will allow for the evaluation of the effects of the test object in a controlled environment. Test

flights will be flown and will include approaches, orbits, and radials. The VDB received power will be measured at discrete time intervals during the flight tests. The aircraft attitude will also be recorded in order to compute the field strength incident at the skin of the aircraft based on the internal measurements. The received messages will be logged for post-processing comparison with the transmitted data. Time Space Position Information (TSPI) data will also be collected to correlate field strength and message losses to aircraft position in post-processing.

VDB Antenna Critical Area. The objective of the VDB Antenna Critical Area Study is to assess the impact that the RRA critical area has on airport operations at several airports. This study will provide a preliminary assessment on the siteability of the VDB antennas at various airports.

VDB Antenna Optimum Height. The objective of the RRA Optimum Height Study is to define and verify the minimum, nominal, and maximum RRA mounting height. The ability of the VDB Antenna to meet the minimum field strength requirements throughout the required coverage volume will be assessed at different antenna heights. This study will apply the results of the VDB Baseline Performance Study to non-ideal simulation environments which contain scatterers and challenging terrain. An analysis of ground reflection area vs. antenna height will be performed. T&E will be performed using the same test methodology as used in the VDB Antenna LOCA Study.

VDB Coverage Exclusion Regions. The objective of the VDB Coverage Exclusion Regions Study is to define and to determine the actual measured limits on the VDB coverage exclusion regions.

There are two allowed exclusion zones in the VDB coverage volume. The first exclusion zone allows for field strengths below the minimum requirements directly above the VDB antenna. This zone is defined as a cone with a cone angle not to exceed (NTE) 5° by design. The second exclusion zone allows for field strengths greater than the maximum field strength requirements in proximity to the VDB antenna. This exclusion volume is defined as a cylinder (with a semi-sphere at the top) about the VDB antenna with a radius not-to-exceed 200 meters by design.

Field strength measurements will be taken on the ground using a test van and in the air using test aircraft to determine the limits of the exclusion areas. Test flights will include overflights of the VDB antenna at various heights to measure the limits of the minimum field strength exclusion area. Test flights and ground tests will also be conducted in lateral proximity to the VDB antenna to measure the limits of the maximum field strength exclusion area.

T&E will be performed using the same test methodology as used in the VDB Antenna LOCA Study.

VDB Interference. The objective of the VDB Interference Study is to assess the potential for interference to commercial communications equipment and existing NAVAIDs. T&E will be conducted in the laboratory and airport environments to assess the potential for interference.

There are reported cases of VDB interference from preliminary LGF systems deployed under the FAA Government Industry Partnership to VOR monitors and ATC emergency backup communications. Mitigation strategies for any VDB interference will be developed through siting T&E at the prospective airport.

LGF Siting Feasibility. The objective of the LGF Feasibility Study is to apply the siting criteria developed in the preceding studies to actual airport environments to assess the feasibility of siting LGF equipment on airport property.

This study will act as a validation activity for the developed siting criteria. The siting procedures and engineering siting criteria defined by the SWG will be applied to select candidate airports on the FAA CAT I priority list. This study will be used to refine the siting procedures and determine if (1) the siting criteria is correct, and (2) the siting of an LGF in accordance to the defined siting criteria is realizable.

LOOKING FORWARD TO CAT II/III

It is envisioned that the CAT II/III LGF architecture will be similar to the CAT I architecture. There must be augmentations to the CAT I system to allow it to meet the more stringent CAT II/III requirements. These augmentations include the integration of additional RRs and VDBs, and airport pseudolites.

It is important for the siting engineer to be aware of CAT I LGFs that are planned to be upgraded to CAT II/III systems and the runways that are designated to be CAT II/III capable. This information will be a critical input to the siting decision, especially of the VDB, since coverage through rollout at the designated runways will be mandatory. The primary goal of any CAT I LGF siting effort will be to minimize the potential for resiting the system in the future.

ACKNOWLEGEMENTS

The author would like to acknowledge the hard work and dedication of the LAAS Siting Working Group members upon whose work much of this paper is based. These members include Dr. Mike DiBenedetto, Roamey Viles, Jerry Bradley, Bob Bonanni, Jack Ricks, Mark Dickinson, Jim Copeland, Navin Mathur, and Robyn Hausmann. Thanks also to Dr. Frank Marcum for the IAH analysis, and Diane Griffith and John Warburton for their insightful review of the paper.

REFERENCES

1. FAA-E-2937, "Specification for Performance Type One Local Area Augmentation System Ground Facility", September 21, 1999.
2. "Requirements Document for the Local Area Augmentation System", 1997
3. FAA Order 6750.16C, Siting Criteria for Instrument Landing Systems", October 31, 1995
4. FAA Order 6830.5, "Criteria for Siting Microwave Landing Systems (MLS)", July 22, 1993.
5. AC 150/5300-13, "Airport Design".
6. FAR Part 77 Subpart C, "Obstruction Standards".
7. Braasch, M., "Isolation of GPS Multipath and Receiver Tracking Errors," NAVIGATION: Journal of The Institute of Navigation, Vol. 41, No. 4, Winter 1994-95.
8. Warburton, J., et al., "Flight Test Results of the FAA Local Area Augmentation System Test Prototype", ION 53rd Annual Meeting proceedings, July 1997.